Project Presentation

CONTROLLED RECTIFIER USING MOSFETS

Turning AC to DC using efficient switches

Group Members:
2106174- Tasnim Iqbal
2106185- Pronab Kumar Das
2106186- Md. Rakibul Islam Rafi
2106187- Zahin Hasin Rudro
2106188- Arpanaditya Mazumder
2106191- Md. Jayed Imran

Course No.: EEE 316
Course Title: Power Electronics Laboratory
July 2025
Level 3 Term-II

INTRODUCTION

Why we need to convert AC into DC?

- Most of the electricity supplies is in AC
- Most of the Electronics run on DC
- Conversion is necessary to bridge between power transmission and usage

PROBLEMS OF TRADITIONAL RECTIFIERS

- Uncontrolled Voltage Levels
- Voltage drop across Diodes
- Low Efficinecy
- Not suitable for market

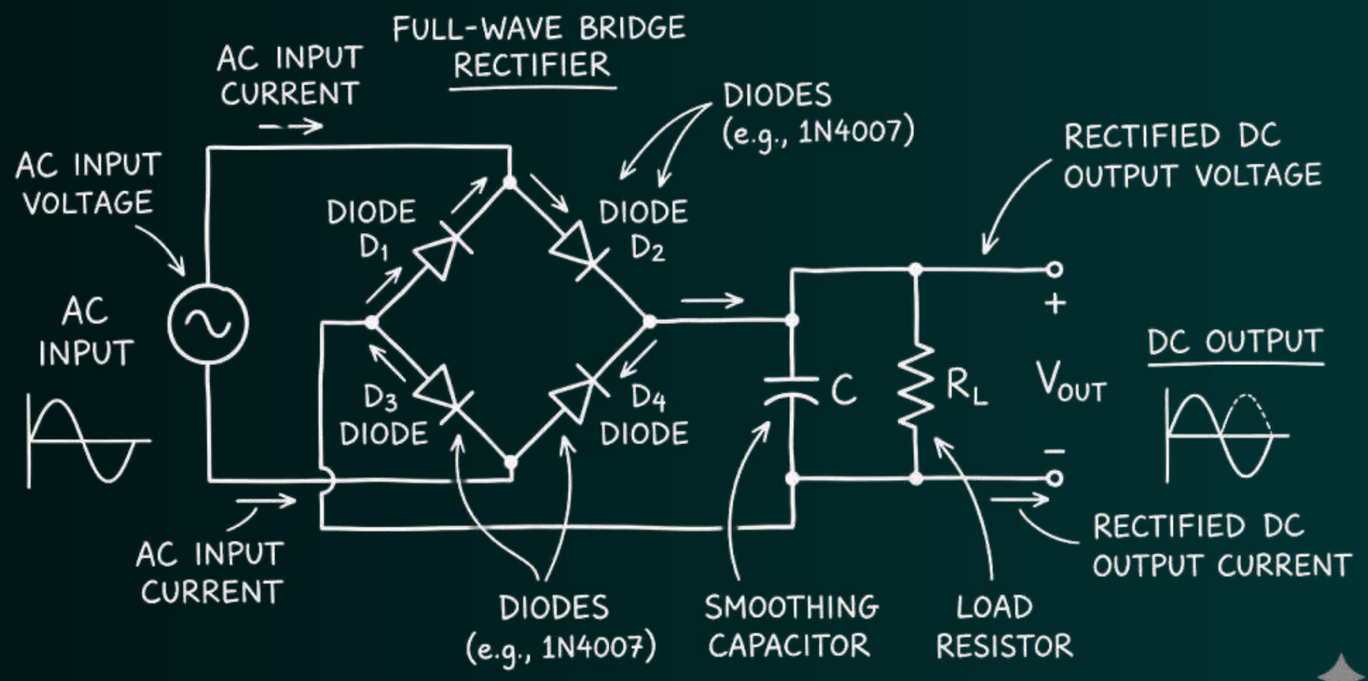

MOSFETS TO OVERCOME PROBLEMS

- Controlled DC Voltage Levels
- No Voltage Drop across MOSFETs
- Efficient full wave rectifier
- Suitable for real life usage

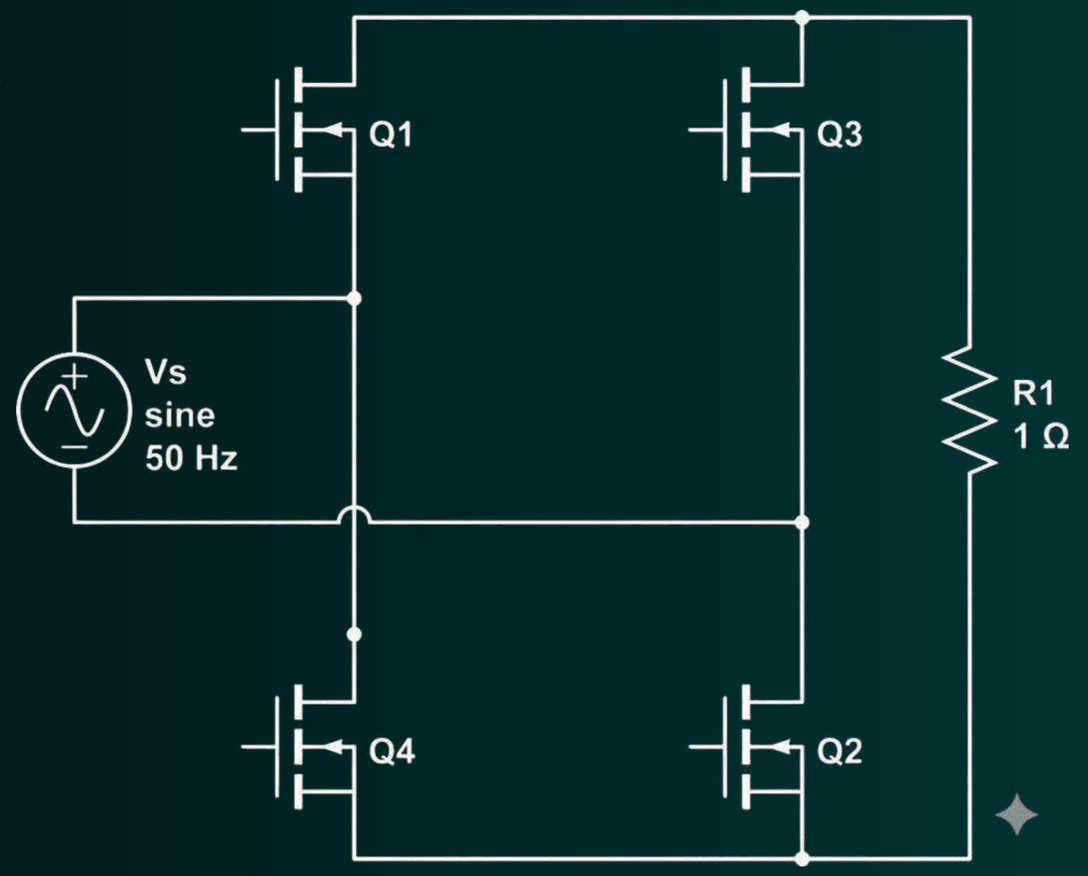

OUR OBJECTIVES

- ✅ Design a full wave bridge rectifier using MOSFETs
- ✅ Implement control over output voltage
- ✅ Reduce power loss compared to diode rectifiers
- ✅ Analyze waveform and performance

MOSFETS
WORKING PRINCIPAL

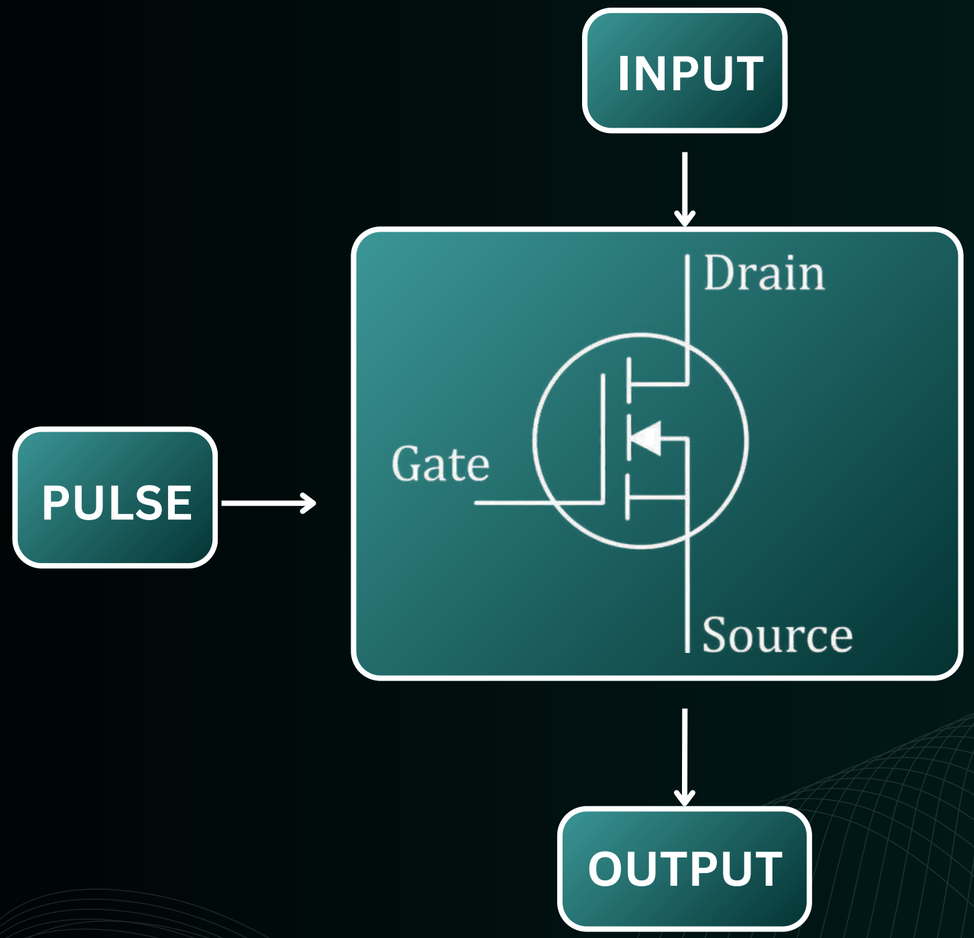

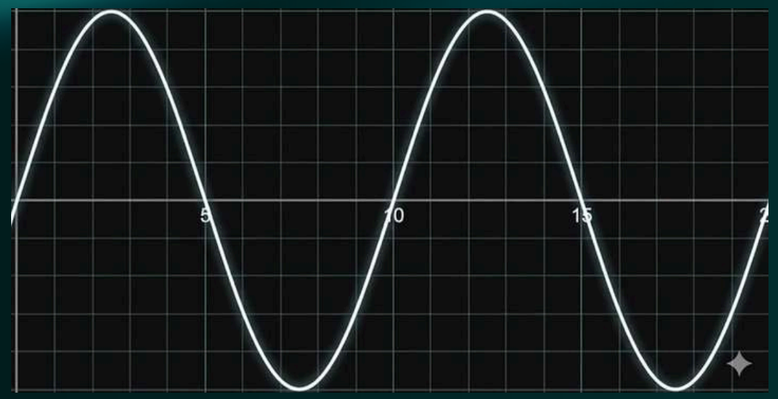

INPUT

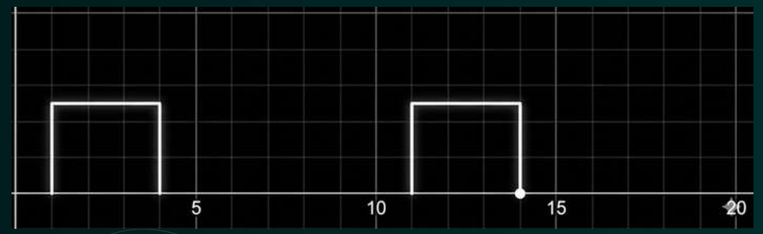

PULSE

OUTPUT

FUNCTIONAL BLOCKS

4 Functional Blocks Are Required:

1. MOSFET Bridge
2. MOSFET Drivers
3. Arduino Block
4. Optocoupler Block

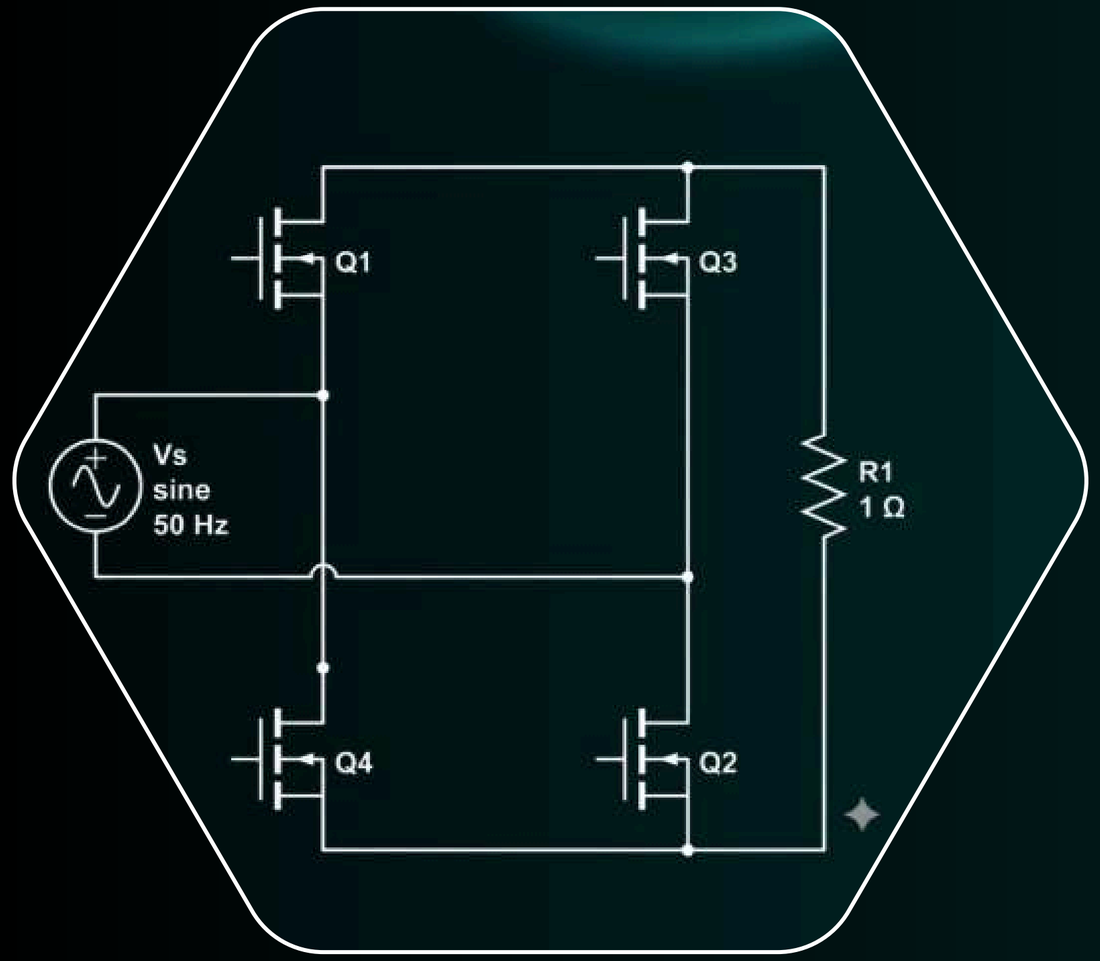

MOSFET BRIDGE BLOCK

- Main Working Block
- Converts AC supply to DC
- Works Based on Complimentary Pulses
- Q1,Q2 is on at at positive half-cycle, Q3,Q4 is on at negative half-cycle

MOSFET
DRIVER BLOCK

- Ensures pulses are given across Vgs
- Drives MOSFETs of both sides
- Amplifies the pulses coming from Arduino
- Ensures proper switching of MOSFET gates

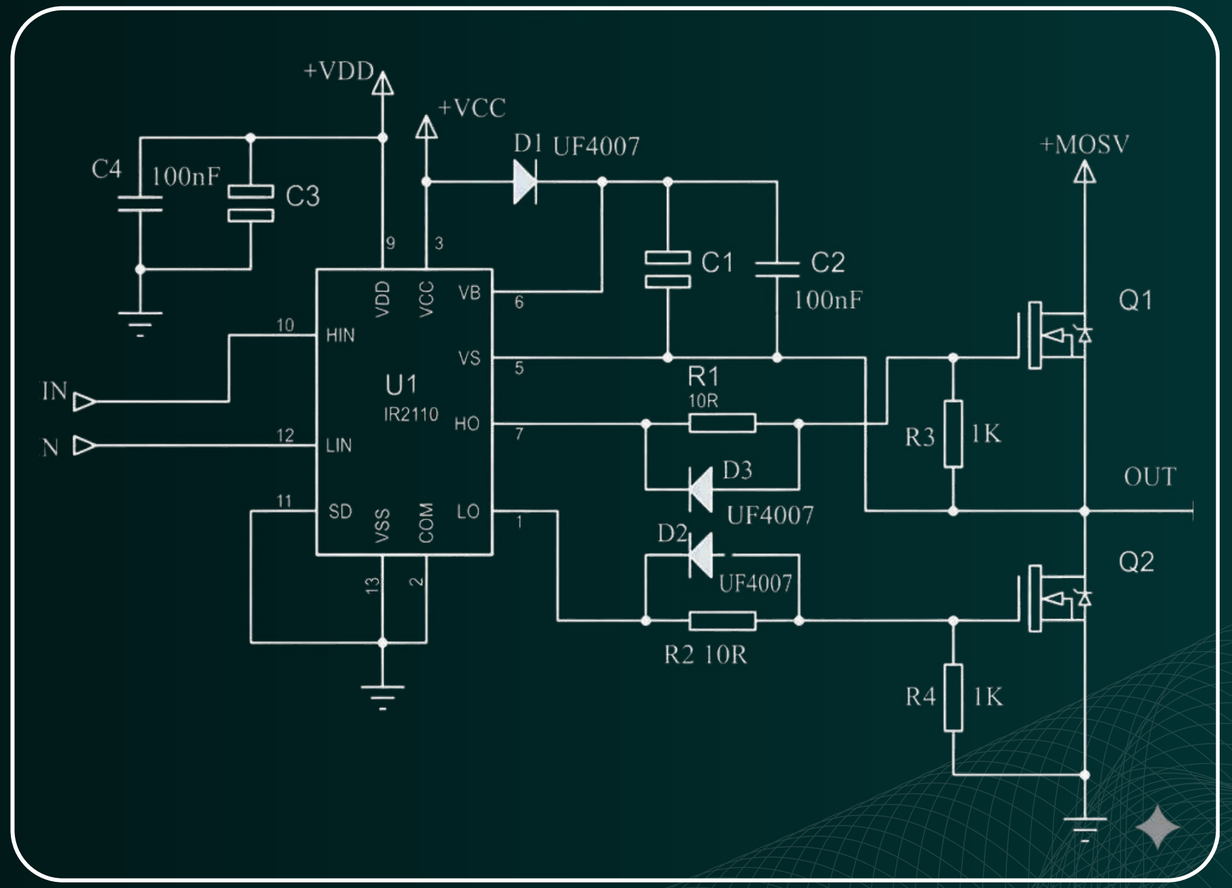

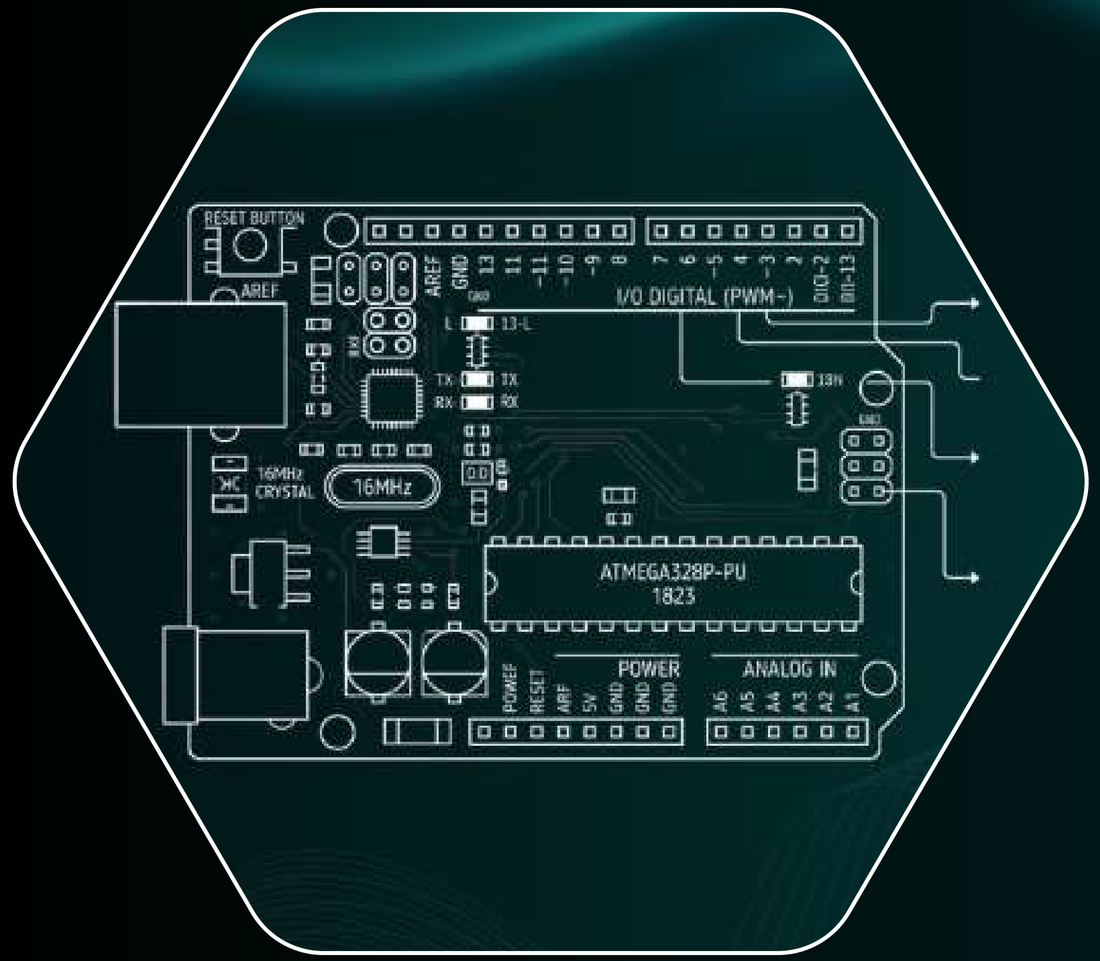

ARDUINO BLOCK

- Generates firing pulses for MOSFETs
- Drives MOSFETs of both sides
- Controls firing angle (phase control)
- Adjusts output voltage via timing control

OPTOCOUPLER BLOCK

- Provides electrical isolation between control and power circuits
- Enables safe zero-crossing detection
- Ensures right timing of pulses by giving input to ARDUINO

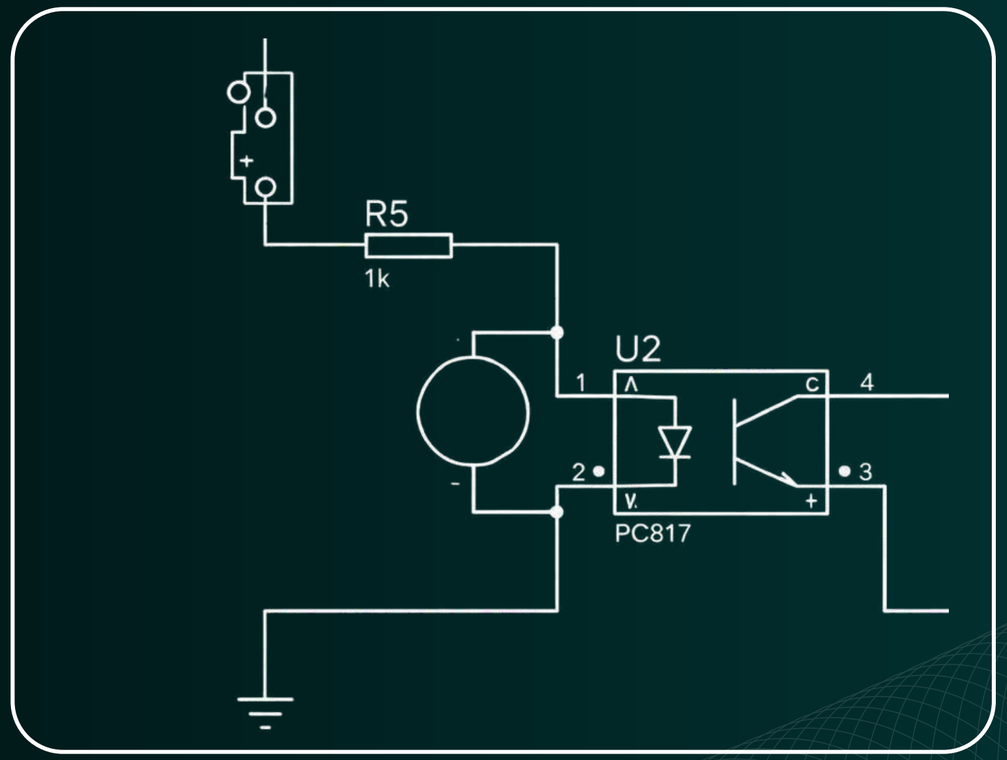

WORKING MECHANISM

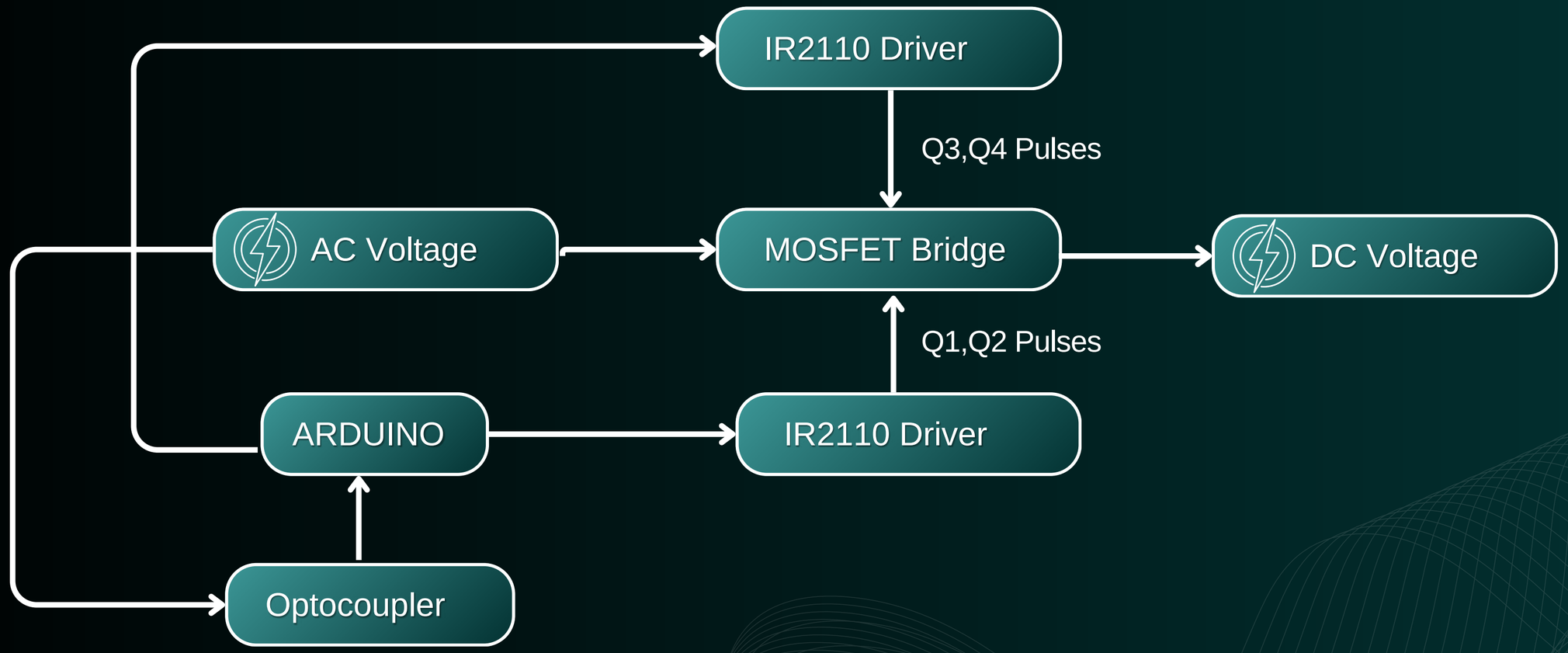

SIMULATED CIRCUIT

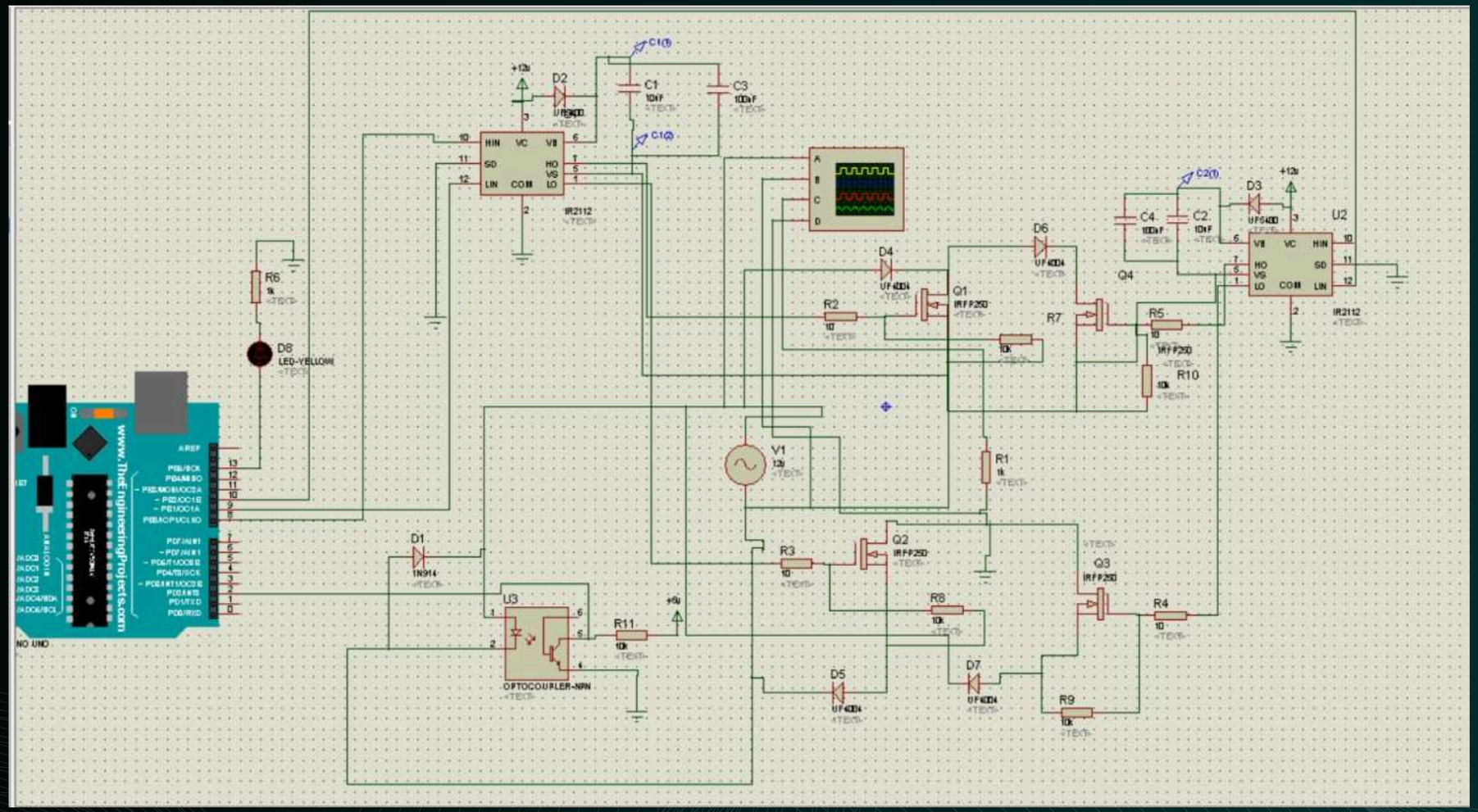

OUTPUT FROM SIMULATION

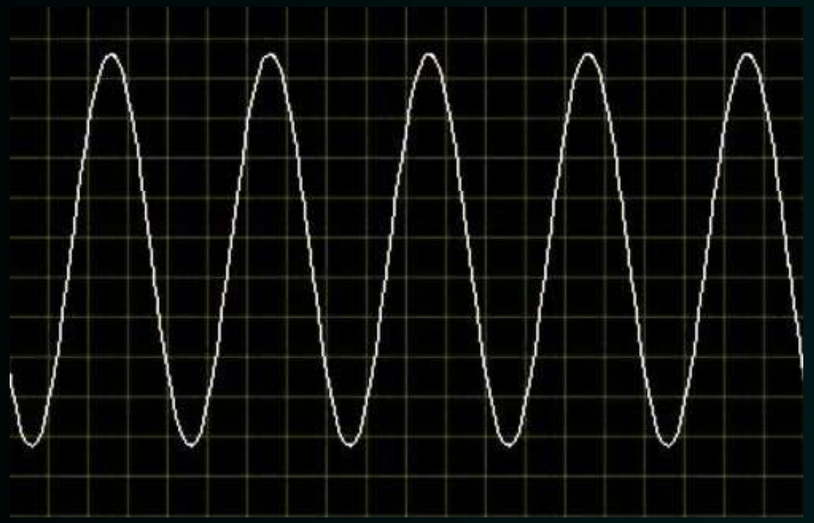

INPUT

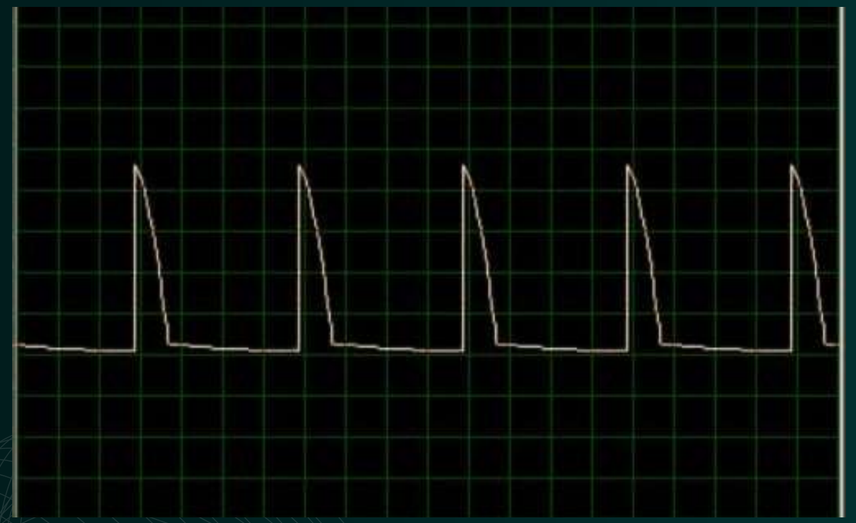

OUTPUT

Output was controlled rectified sinusoidal wave, hence, simulation was successful.

HARDWARE IMPLEMENTATION

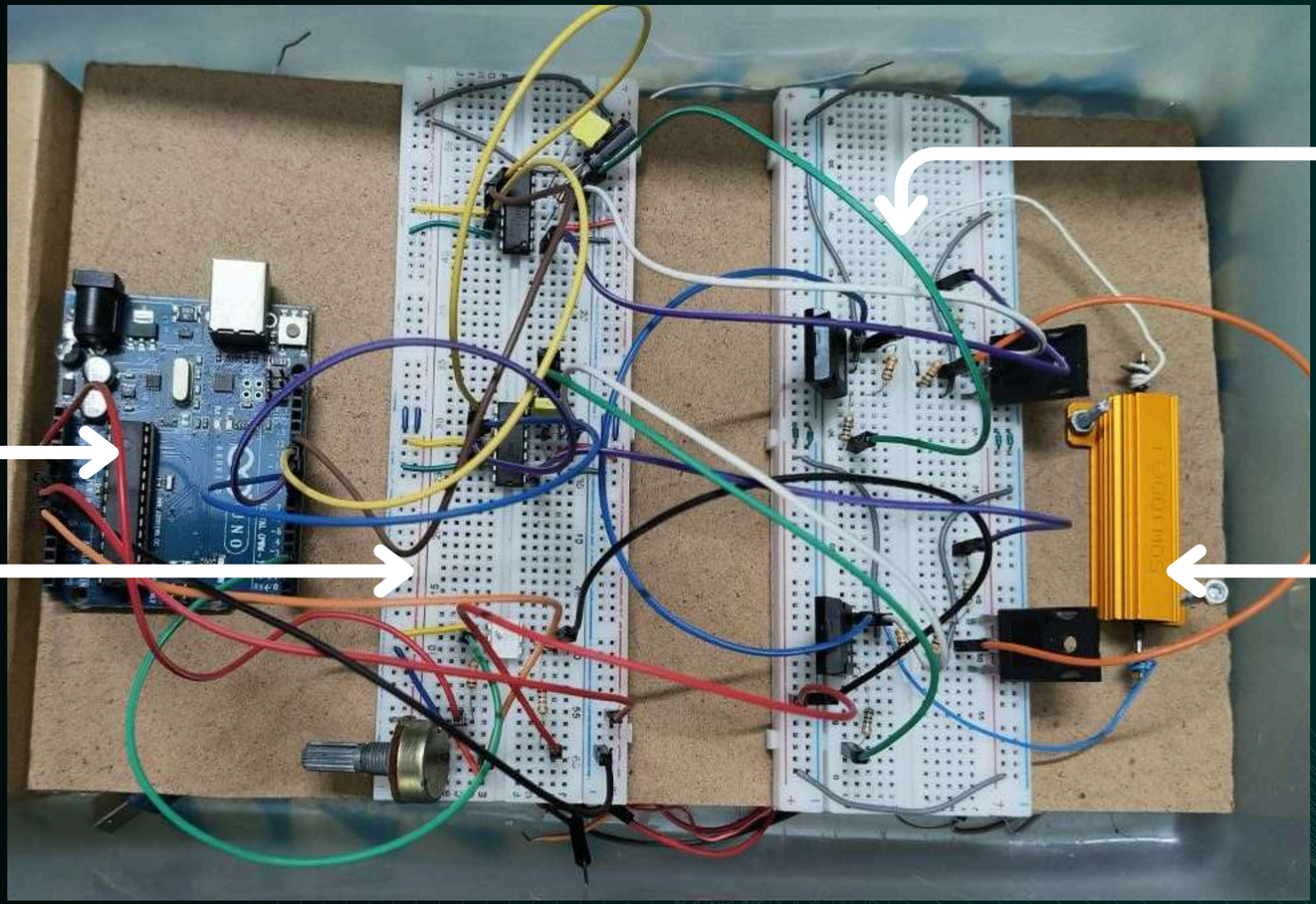

ARDUINO

Driver Circuit

MOSFET Bridge

Load

RESULTS

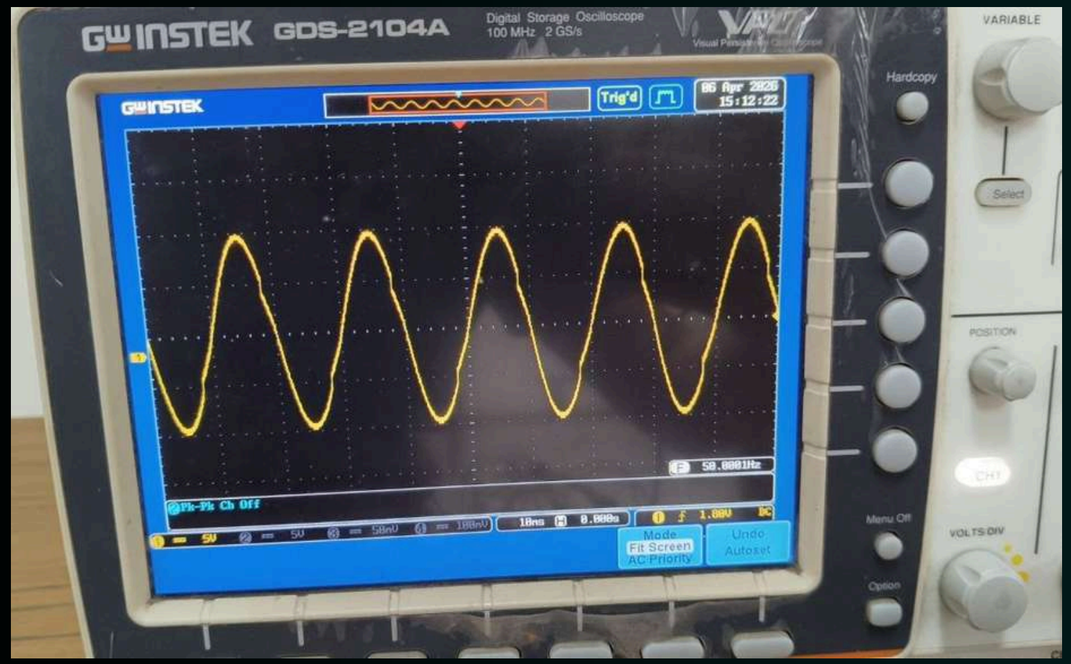

Input Signal

Complimentary Pulses

RESULTS

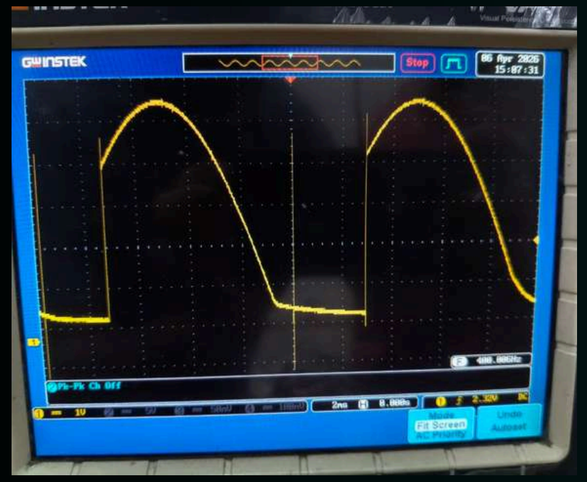

Firing Angle 45 degree

Firing Angle 90 degree

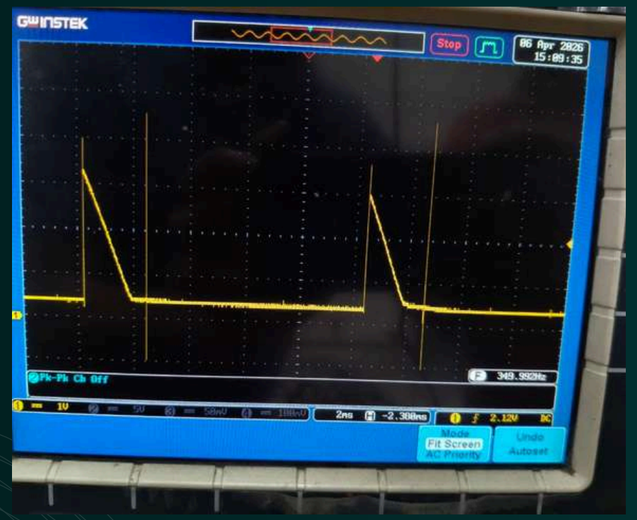

Firing Angle 135 degree

ANALYSIS

Here, our input was a sinusoidal signal 20V peak to peak and 50 Hz frequency.
The firing angle of pulses control the rectified voltage level

Considering 0 degree firing angle (full wave 100% rectification):
The output peak voltage was 6.8V

Hence, the efficiency= 47.6%

LIMITATIONS

- The output contained was rectified but not properly DC
- No filters were used to smoothen the rectified output
- MOSFETs may not work properly if the frequency gets higher
- Suitable for low to moderate level voltages
- No heat sinks were used to cool down the MOSFETs

FUTURE SCOPES

- Closed loop automatic regulation can be added by current/voltage feedback
- Proper low pass filter can be used to get smooth DC voltage
- Can be integrated with solar systems for controlled DC
- Design can be improved for high frequency applications
- Advanced semiconductors like- SiC and GaN MOSFETs might increase the efficiency and usages

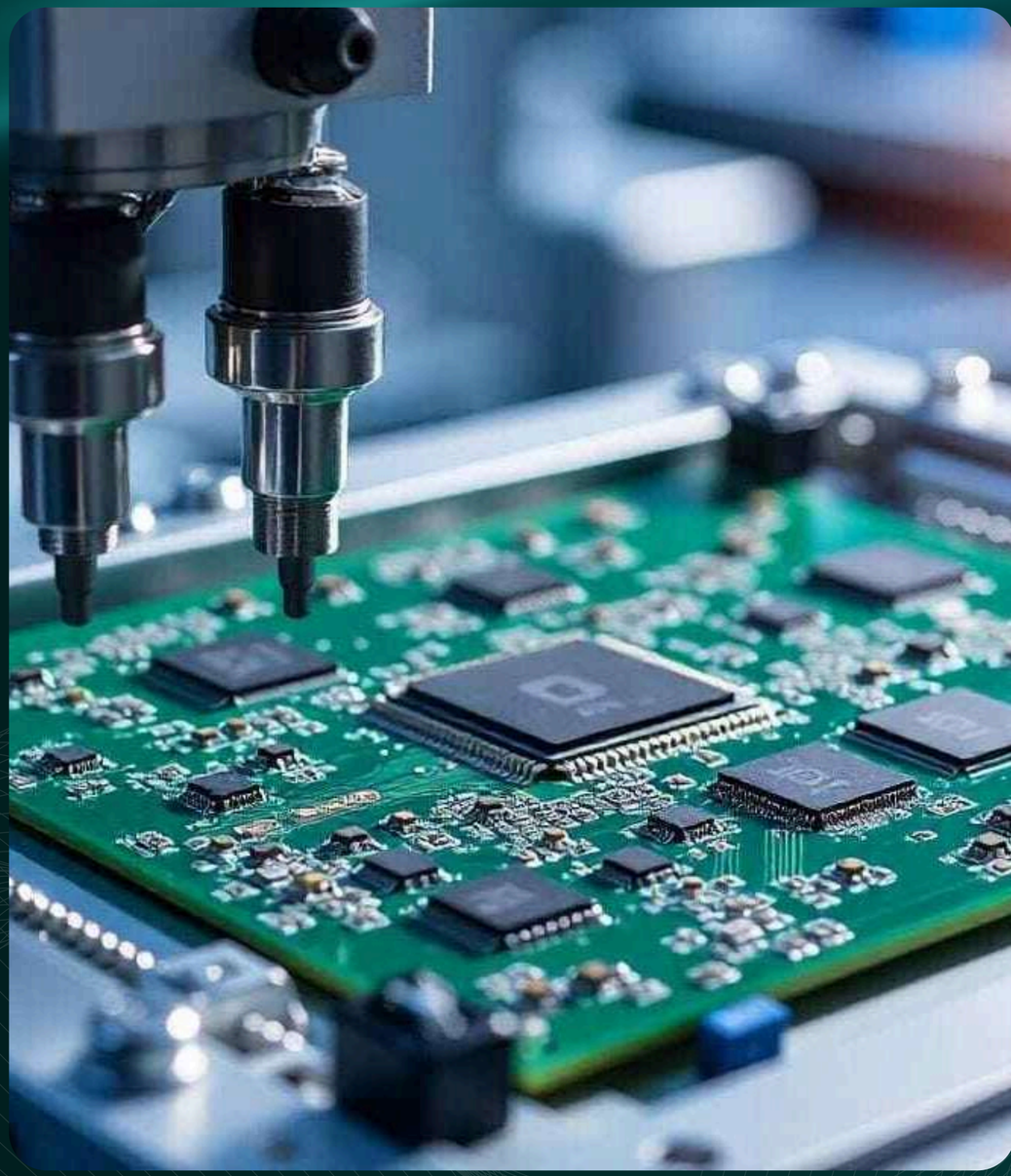

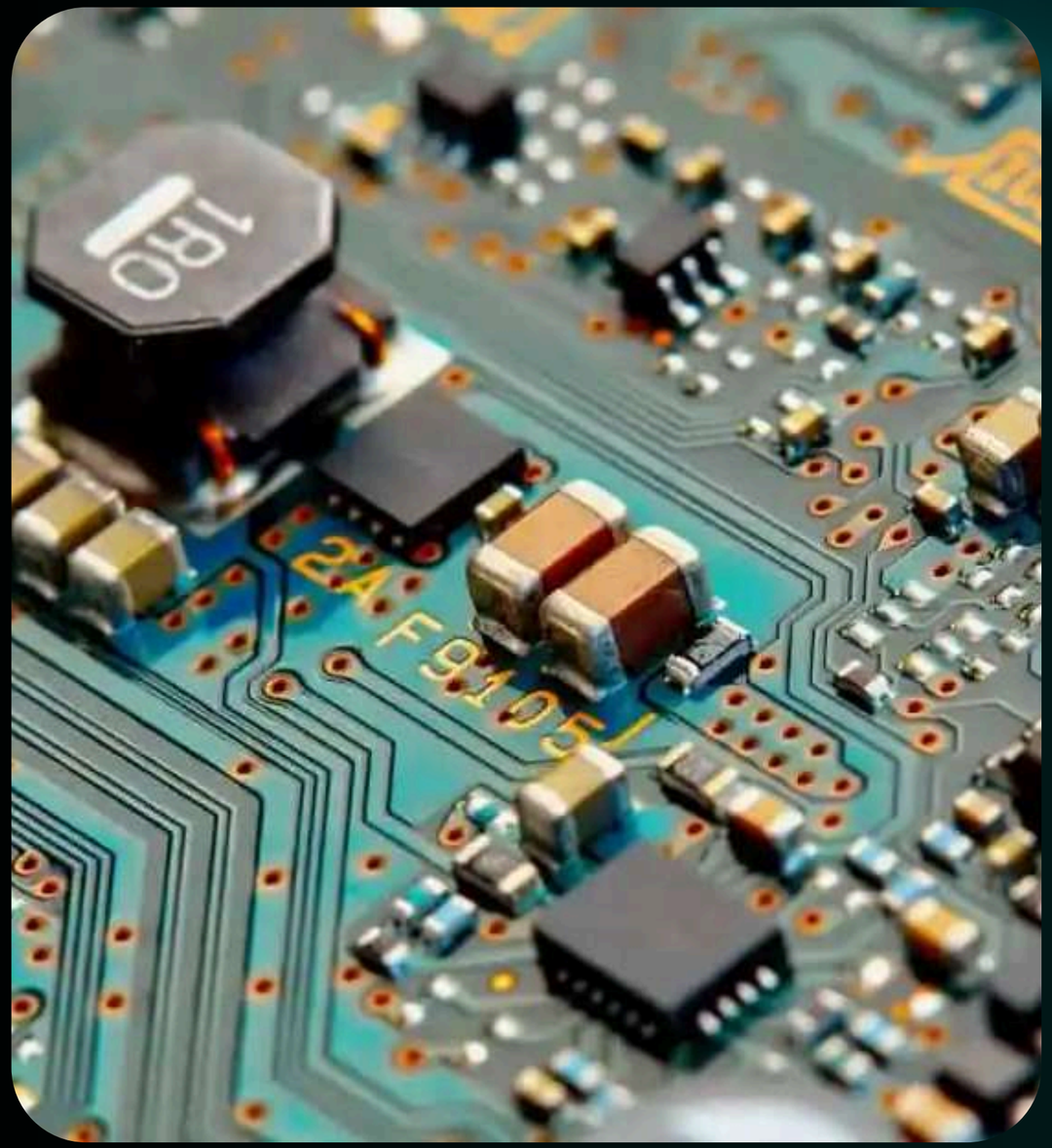

DESIGNING CAUTIONS

- Using proper Gate drivers to ensure the pulse is to fed as Vgs in the MOSFETs
- Had to use Optocoupler to detect zero crossing and control pulse signal accordingly
- Had to ensure deadtime between the pulses
- Had to ensure adequate gate voltage (10-15V) to drive the MOSFETs
- Had to include proper resistors and capacitors in circuits to ensure functionality

CONCLUSION

Compared to traditional diode rectifiers, this system provides controlability over output voltage using phase angle control, making it suitable for adoptive and and smart power electronics applications.

Hence, the project was a success.

TEAM MEMBERS

Pronab Kumar Das
2106185

Tasnim Iqbal
2106174

Md. Rakibul Islam Rafi
2106186

Zahin Hasin Rudro
2106187

Arpanaditya Mazumder
2106188

Md. Zayed Imran
2106191

THANK YOU
FOR YOUR ATTENTION

Turning AC to DC using efficient switches